Tiandy

# TC-H363N 9DA-4

PT Camera

4G Series

## KEY FEATURES

- Plastic housing
- Up to Panorama:3MP,2304×1296@20fps Detail:3MP, 2304×1296@20fps
- S+265/H.265
- Color:0.02Lux@(F1.6,AGC ON),B/W:0Lux with IR
- IR range up to 30m
- 1×Built-in Mic, 1×Built-in Loudspeaker
- Support microSD/microSDHC/microSDXC card,up to 256GB
- Operating conditions -20°C~50°C(14°F~122°F) (Charge:-20°C~50°C), ≤95%RH
- DC5V±25%,Max. 10W
- IP65

Tiandy Technologies Co.,Ltd Tiandy Overseas Tiandy @tiandyofficial

Tiandy Technologies Co.,Ltd.
Email: sales@tiandy.com Tel: +86-22-58596065
Website: en.tiandy.com Fax: +86-22-58596048

2025.12.02

Tiandy

## SPECIFICATIONS

| | |
|---|---|
| **Camera** | |
| Image Sensor | Panorama: 1/2.9"CMOS<br>Detail: 1/2.9"CMOS |
| Min. Illumination | Color:0.02Lux@(F1.6,AGC ON),B/W:0Lux with IR |
| Shutter Time | 1s-1/100000s |
| Day&Night | Fixed IR-cut |
| WDR | DWDR |
| S/N | ⩾52dB |
| Angle Adjustment | Panorama:-60~60°(P)<br>Details:0~345°(P); Panorama:5~15°<br>Details:0~90° |
| **Lens** | |
| Lens Type | Fixed focal lens |
| Focal Length | Panorama: 4mm<br>Detail: 4mm |
| Lens Mount | M12 |
| Aperture Range | F1.6 |
| Aperture Type | Fixed |
| Field of View | Panorama:79.6°(H);<br>Detail:79.6°(H); Panorama:42.5°(V);<br>Detail:42.5°(V); Panorama:91.7°(D);<br>Detail:91.7°(D) |
| DORI Distance | Panorama:<br>Detect: 59.26 m<br>Observe: 23.52 m<br>Recognize: 11.85 m<br>Identify: 5.93 m<br>Detail:<br>Detect: 59.26 m<br>Observe: 23.52 m<br>Recognize: 11.85 m<br>Identify: 5.93 m |
| **Pan&Tilt** | |
| Pan Speed | 30°/s |
| Tilt Speed | 25°/s |
| Preset | 64 |
| **Illuminator** | |
| IR LEDs | Panorama:4<br>Detail:4 |
| IR Distance | Up to 30m |

Tiandy

| | |
|---|---|
| Wavelength | 850nm |
| White LEDs | Panorama:4<br>Detail:4 |
| Whitelight Distance | 20m |
| Red and Blue Alarm Flash | Yes |
| **Compression Standard** | |
| Video Compression | S+265/H.265 |
| Video Bit Rate | 1.2Mbps |
| Audio Compression | G.711A |
| Audio Sampling Rate | 16kHz |
| **Image** | |
| Max. Resolution | Panorama:3MP,2304×1296@20fps<br>Detail:3MP,2304×1296@20fps |
| Main Stream | Panorama:<br>PAL:20fps(2304×1296)<br>Detail:<br>PAL:20fps(2304×1296) |
| Sub Stream | PAL:15fps(704×576) |
| AGC | Yes |
| 3D DNR | Yes |
| White Balance | Auto |
| OSD | 48*48; Lattice |
| **Feature** | |
| General Alarm | Smart Alarm(human and vehicle detection) |
| Exceptions Alarm | Disk Full; Disk R/W Error |
| Linkage Method | Trigger Sound; Trigger Warmlight; Trigger Recording; Trigger Capture |
| Auto-Tracking | Auto-Tracking |
| **Network** | |
| Protocols | TCP/IP; UDP; ICMP; DNS; NTP; IPv4; SSH; Unicast |
| Remote Connection | ≤2 |
| Client | Easy7 VMS |
| Mobile Client | EasyLive Plus |
| **Interface** | |
| Built-in Mic | 1×Built-in Mic |
| Built-in Speaker | 1×Built-in Loudspeaker |
| Reset Button | Yes |
| On-board Storage | Support microSD/microSDHC/microSDXC card,up to 256GB |
| **General** | |
| Operating Temperature | -20°C~50°C(14°F~122°F)<br>(Charge:-20°C~50°C) |

Tiandy

| | |
|---|---|
| Operating Humidity | ≤95%RH |
| Storage Temperature | -20°C~50°C(14°F~122°F) |
| Storage Humidity | 10%~95%RH(non-condensing) |
| Power Supply | DC5V±25%,Max. 10W |
| Protection | Surge500V; ESD6000V; IP65 |
| Boundary Dimensions | 183(L)105(W)202(H)mm |
| Package Dimensions | 315(L)225(W)180(H)mm |
| GrossWeight | 1.66kg |
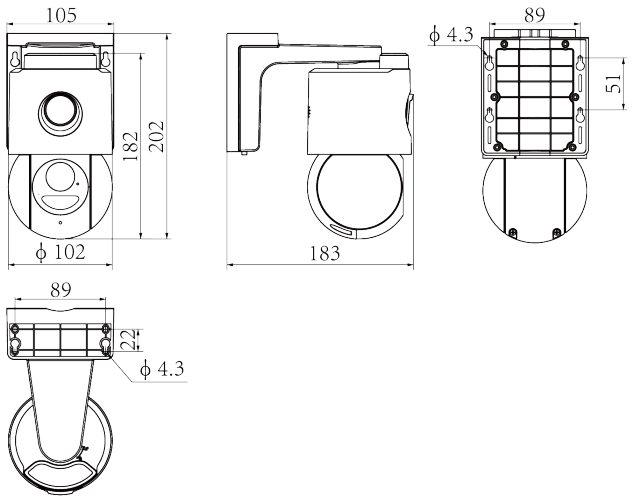
## DIMENSIONS (Unit: mm)